SPECIFICATIONS

Type	Standard fan type	Low-volume fan type
Model No.	**ER-F12**	**ER-F12S**
Charge removal time	Approx. 1s (note 1)	Approx. 1.5s (note 1)
Ion balance	Max. ±10V (note 2)	
Power supply voltage	24V DC ±10%	
Power consumption	Max. 700mA	Max. 400mA
Discharge method	High-frequency AC method	
Discharge output voltage	Approx. ±2kV	
Max. fan speed	5.3m/s (note 2)	4.0m/s (note 2)
Max. fan volume	3.68m³/min	2.50m³/min
Main functions	Error output, discharge halt input	
Indicators	Discharge error (red), fan error (red), power (green), discharge (green)	
Accessories	Straight louver: 1 pc. (note 3), angle louver: 1 pc. Caution label: 1 set, rubber cushion: 1 pc.	

Notes:
1) Typical value at 200mm from directly in front of air outlet, fan speed MAX, straight louver, with no filter installed.
2) Typical value at 300mm from directly in front of air outlet, fan speed MAX, straight louver, with no filter installed.
3) The discharge needle unit is loaded on the straight louver before shipment.

OPTIONS

ER-F12ANT / Discharge needle unit
Unit with tungsten needles (1 pc.)

ER-F12FX5 / Air filter
Replacement filter (5 pcs. per set)

DIMENSIONS (Unit: mm)

ER-F Ionizer main unit

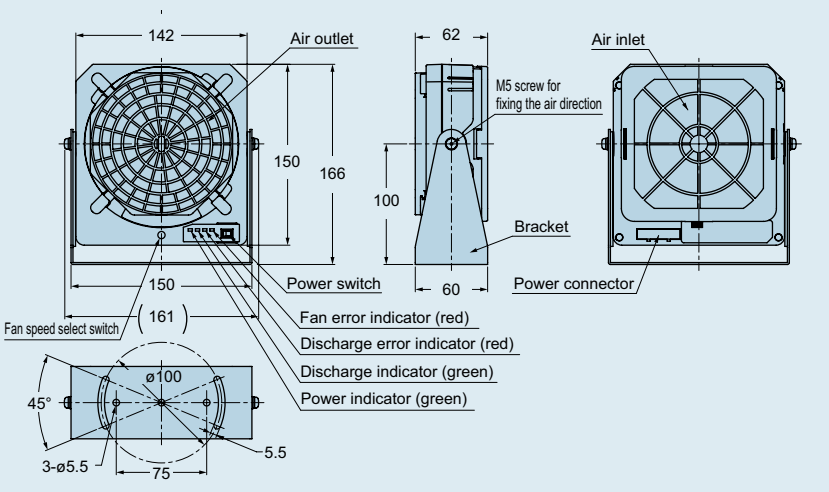

CHARGE REMOVAL CHARACTERISTICS (TYPICAL)

Measured at center of a 150 x 150mm charge plate monitor.
* Solid lines in the graphs show **ER-F12**.
Dotted lines show **ER-F12S**.

Charge removal field (fan speed MAX, straight louver is mounted)

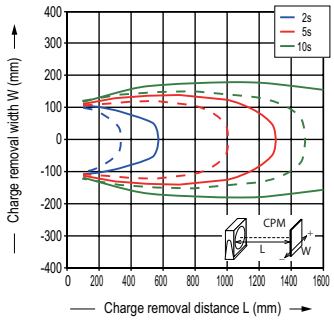
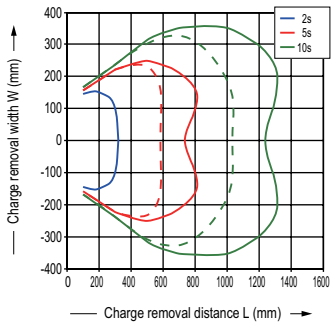
Charge removal field (fan speed MAX, angle louver is mounted)