AUTO IN-LINE FUSE HOLDERS

Electric Parts

R3-90 □ — Waterproof

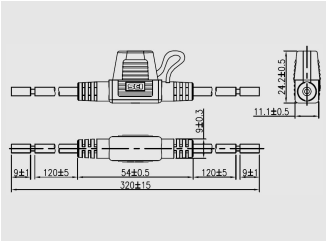

WIRE

FUSE

MICRO BLADE FUSE

	RATING	WIRE GAUGE (Heavy Duty)	WIRE COLOR
A	30A 32V DC	12AWG	Red
B	20A 32V DC	14AWG	Red
C	15A 32V DC	16AWG	Red
D	10A 32V DC	18AWG	Red

FEATURES:

- Material:
  Body: Black, PVC(T105°C)

R3-90 □ L — Waterproof / LED Warning Light

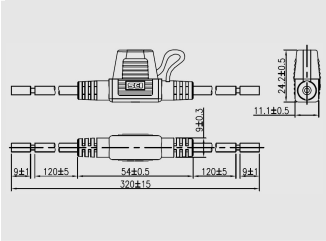

WIRE

FUSE

MICRO BLADE FUSE

	RATING	WIRE GAUGE (Heavy Duty)	WIRE COLOR
A	30A 12V /24V DC	12AWG	Red
B	20A 12V /24V DC	14AWG	Red
C	15A 12V /24V DC	16AWG	Red
D	10A 12V /24V DC	18AWG	Red

FEATURES:

- Material:
  Body: Black, PVC(T105°C)
- LED indicates when fuse is broken.
- None polarity limited.

AUTOMOTIVE BOLT-IN FUSE HOLDER

Electric Parts

R3-91-03F-83

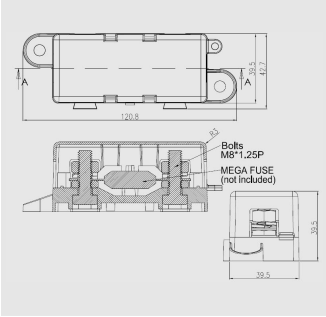

32V DC, 40A~500A(max.)

FUSE

MEGA FUSE

FEATURES:

- Material:
  Cover: Nylon-66 (Black)
  Housing: PBT. (Black)
- Termination: M8 threaded studs and hex nuts for fuse mounting.
- Torque rating: 20 in-lb (2.25Nm) max.
- Mounting torque rating: 12~18Nm max.
- Side stackable for multiple block configurations.
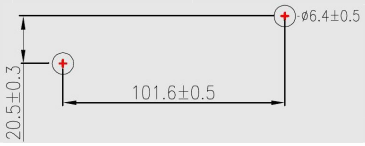
CUT-OUT