REVISIONS		
ISS	ZONE	DESCRIPTION\PER REQUEST\DATE

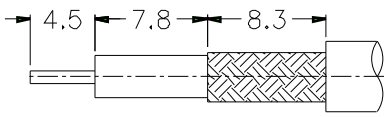

RECOMMENDED
CABLE STRIPPING DIM'S

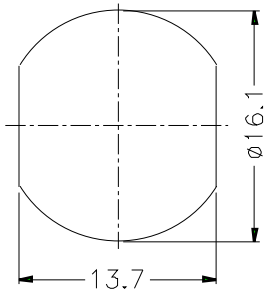

RECOMMENDED
MOUNTING HOLE

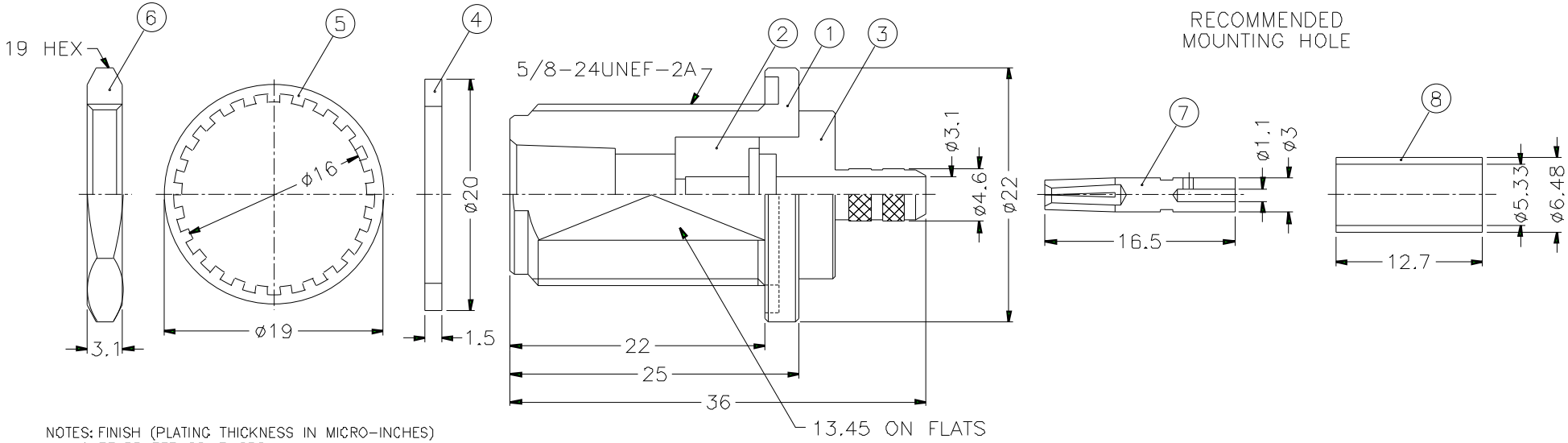

NOTES: FINISH (PLATING THICKNESS IN MICRO-INCHES)
1. BRASS PER QQ-B-626
2. BRASS PER QQ-B-613
3. NICKEL PL. 100 MIN. THICK OVER COPPER STRIKE
4. PHOSPHOR BRONZE PER QQ-B-750
5. GOLD PL. 3 MIN. THICK OVER NICKEL PL. 100 MIN. THICK OVER COPPER STRIKE
6. TEFLON MIL-P-19468

1. CRIMPED FERRULE
HEX CRIMP SIZE .213"
2. CRIMPED CONTACT PIN
HEX CRIMP SIZE .100"
3. MAX. PANEL THICKNESS=6.5mm

NO.	DESCRIPTION	MATERIAL	FINISH	Q'TY	DRAWING NO.
8	FERRULE	COPPER	NOTE 3	1	FR-648/533X 127C
7	CONTACT PIN	NOTE 4	NOTE 5	1	N7000-4-3/11
6	HEX NUT	NOTE 1	NOTE 3	1	HN19-5/8-24X31
5	LOCK WASHER	NOTE 2	NOTE 3	1	LW-19/16X06
4	GASKET	SILICONE	RED	1	GS-20/16X15
3	BARREL	NOTE 1	NOTE 3	1	N7400-3-46/31 -B
2	INSULATOR	NOTE 6	NATURAL	1	N5000-4T-50-A
1	BODY	NOTE 1	NOTE 3	1	N7400-1

DIMENSIONS ARE IN MILLIMETERS

UNLESS OTHERWISE SPECIFIED TOLERANCES
0 5-6 = ±0.2
6-30 = ±0.4
30-120 = ±0.6
120-315 = ±1
315-1000 = ±1.6
1000-2000 = ±2.4

SCALE 2/1 ISSUE A

PART NO. N6421A1-NT3G-1-50

APPROVED DATE 10-11-01'

CHECKED DATE 10-11-01'

DRAWN DATE 10-11-01'

FILE NO.

Amphenol

TITLE
N BULKHEAD CRIMP JACK

DRAWING NO.
KJ-N6421A1-NT3G-58CU-50

ITEM NO.