D1RFRD006

REVISION RECORD				
REV	ECO	DESCRIPTION	DRFT	DATE

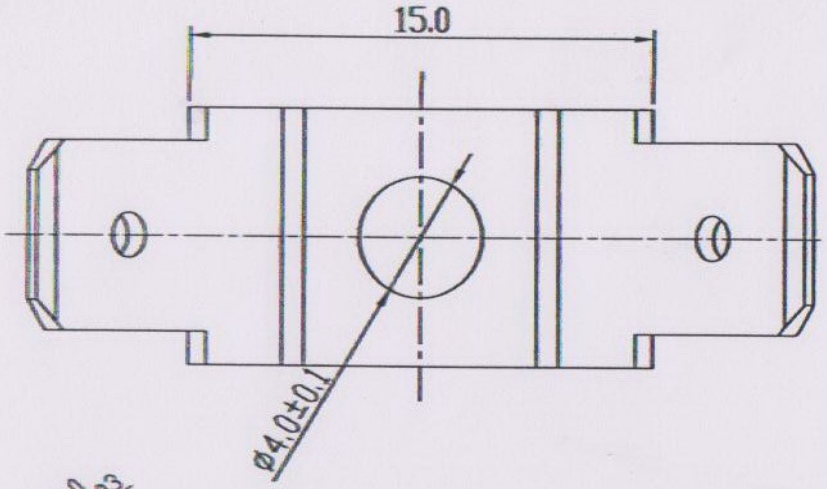

Notes:

1. Material: H62 H/2, T=0.8mm;
2. Plating: Cu plated at the bottom is more than 2um;
Ni plated on the surface is more than 2um;
Sn plated at the bottom is more than 4um;
3. Undimensioned Tolerances:

Pitch range in mm			Nominal dimension range in mm					—
to 6	over 6 to 10	over 10 to 24	to 30	over 30 to 60	over 60 to 100	over 100 to 150	over 150	⌒ ▱
±0.10	±0.15	±0.25	±0.2	±0.3	±0.5	±0.7	±1.0	0.05/10

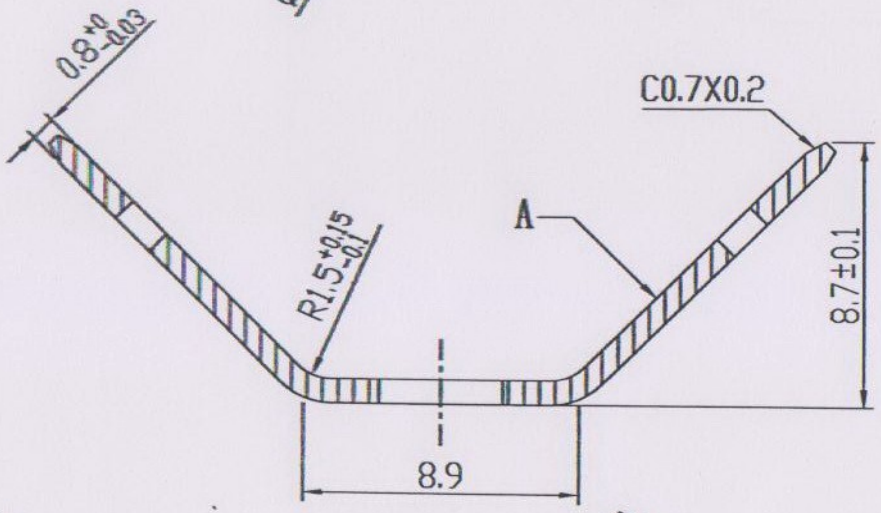

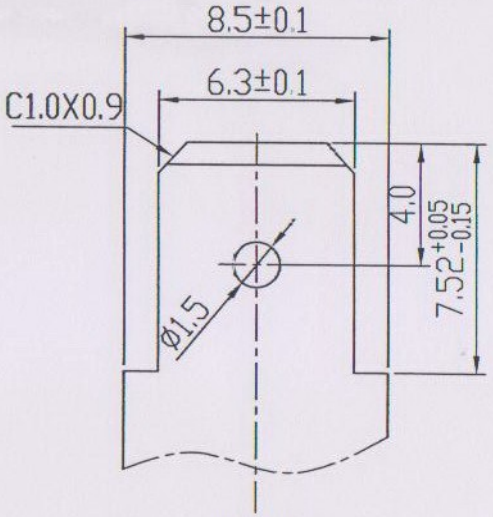

A向视图

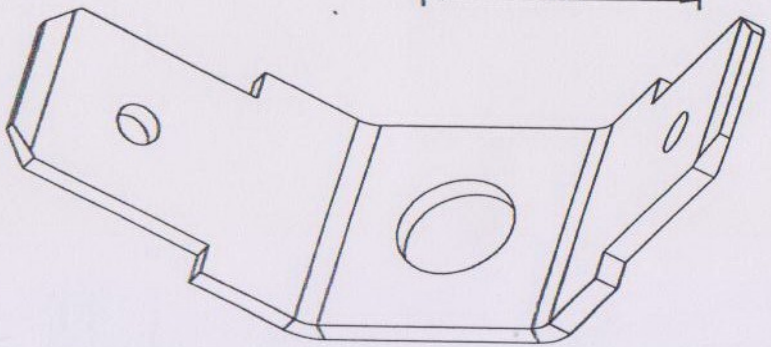

宁波高正电子 发行章 2012.7.08 文管中心

ITEM	NAME OF PART	NC. OF PART	Q'TY	MATERIAL	NOTES
1	K2	C0210		H62	SnCe

DETACHED LISTS

MM / CINCHD

TOLERANCES EXCEPT AS NOTED

MM .0 ± .00 ± .000 ± ± ± ±

ANGLES ± 1°

THIRD ANGLE PROJECTION

DFTD YHG DATE 11/1/08'

CHKD WY DATE 10/30/09

MFD DATE

APPVL Hang DATE 01/30/09

MATERIAL :

G.E :

FINISH:

SCALE : 1:1

DEGSON ® 宁波高正电子有限公司 DEGSON ELECTRONICS CO., LTD

NAME K2-00A(H)

DRAWING NO. K2-E01

/PART NO.

SIZE A4

REV T0 10/23/09'

DO NOT SCALE DRAWING

SHEET 1 OF 1