REV.	ECN NO.	DATE	SIGN	DESCRIPTION
B	LEN-750136	2007/05/09	Jason	Change Panel Cut-Out
C	LEN-7A0027	2007/09/29	Myrdal	Added Note

LTW ENG. DEPT. CONFIDENTIAL
2007.10.12
ISSUED

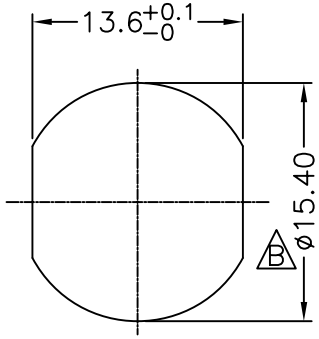

Recommended Panel Cut-Out

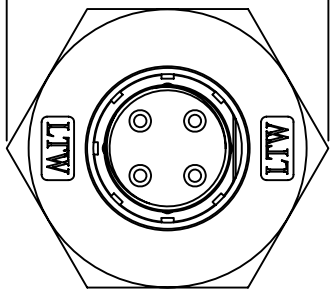

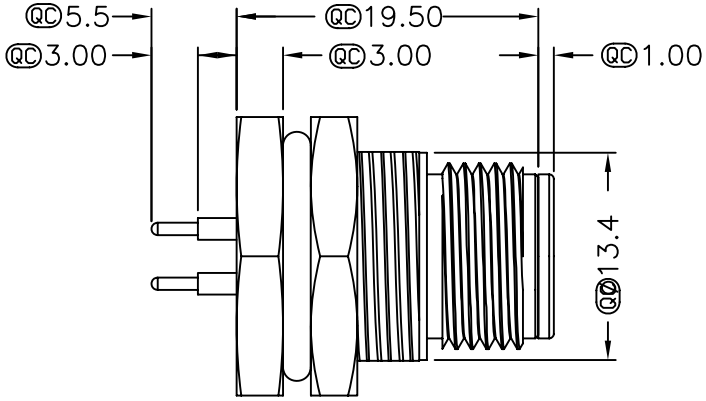

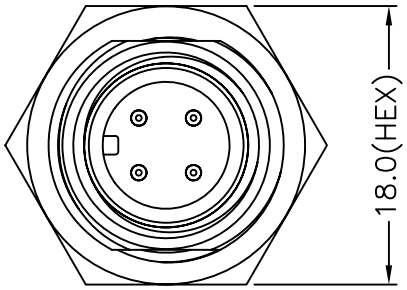

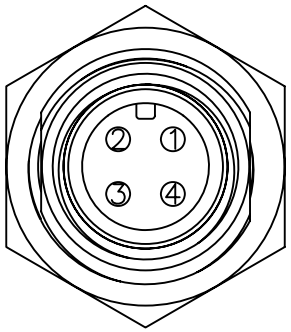

Pin Assignments Front View

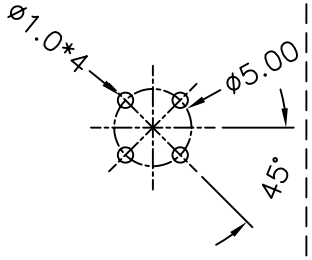

4Pin Male Connector Male Pin PCB Layout

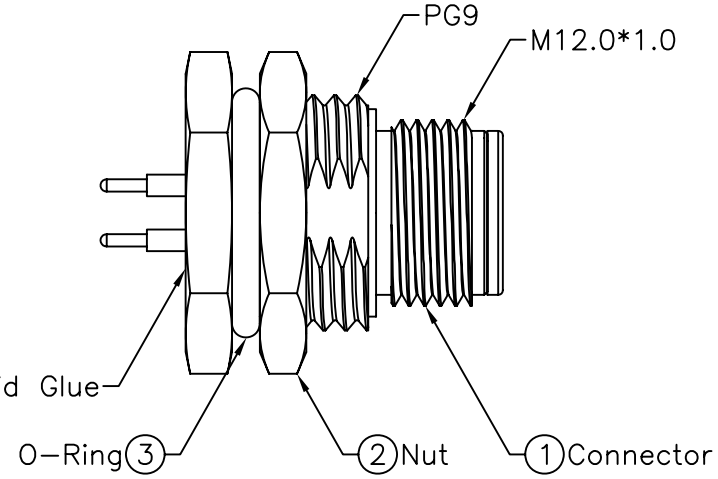

Note:
* QC Important Dimension.
* Waterproof Rate: IP68
* Housing: Black, Nylon+GF
* Male Pin: Copper Alloy, Gold Plated
* Shield: Zinc Alloy, Nickel Plated
* Nut: Zinc Alloy, Nickel Plated
* O-Ring: Black, EPDM
* For Panel Thickness Max 4.5mm
C * Nut Torque: 4-6 kgf.cm

THIS DOCUMENT IS SUBJECT TO CHANGE WITHOUT NOTICE. IT IS CONFIDENTIAL AND A PROPERTY OF LTW. DISCLOSURE TO THIRD PARTY HAS TO BE AUTHORIZED BY LTW.

UNIT:mm

TOLERANCE	
.X	±0.25
.XX	±0.1
.XXX	±0.05
ANGLES	±1°

TITLE: M12 Conn Panel Screw 4Pin M Conn M Pin
SCALE: Free
SHEET: 1 OF 1
REV.: C
SIZE: A4
QC :Inspection Item

LTW
亮泰企業股份有限公司

ITEM NO: LTW12-04PMMP-SF8001	DRAWN BY: Myrdal Manzano	DATE: 2007/09/29
DWG NO: LTW12-04PMMP-SF8001	CHECKED BY: Alan MJ Sundo	DATE: 2007/10/01
CUSTOMER	APPROVED BY: Cloud	DATE: 2007/10/04

QP02C-01-01A2