| REV. | ECN NO. | DATE | SIGN | DESCRIPTION |
|---|---|---|---|---|
| | | | | |
| | | | | |

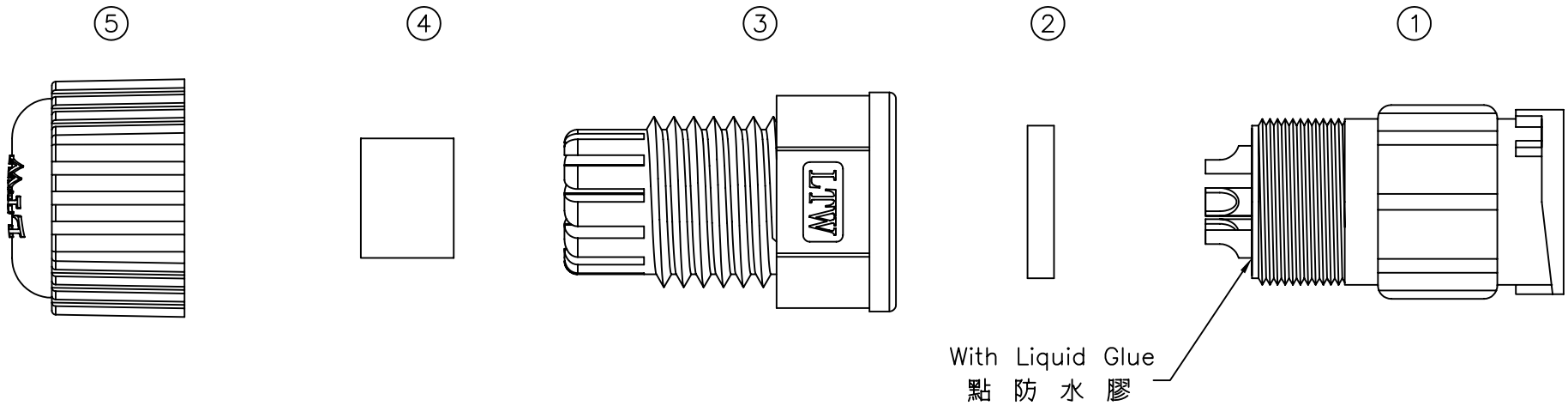


LTW
ENG. DEPT.
CONFIDENTIAL
2006.01.11
ISSUED

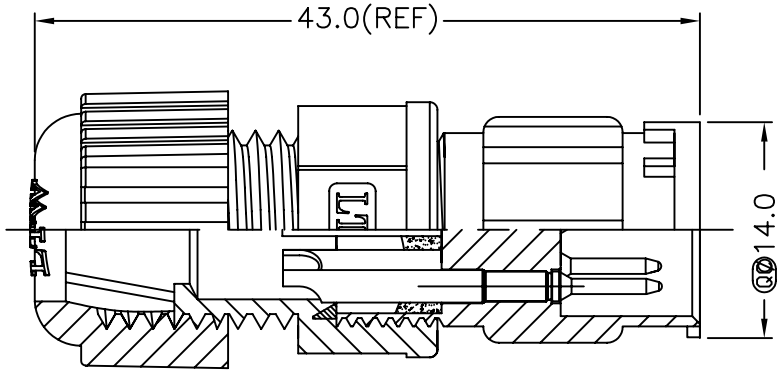


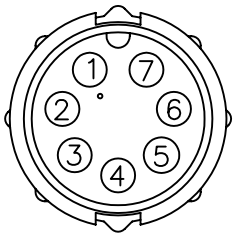


Pin Assignments
Front View 前視圖

Note:

* Waterproof Rate : IP67
* QC Important Dimension To Check.
  (QC 為重點檢驗尺寸)
* Seals for Cable OD:ø4.5mm~ø6.5mm
  (防水墊圈線徑 :4.5mm~ø6.5mm )
* One Set Unassembled in One PE Bag
  (每一組未組裝, 放置於一個 PE 袋, 並封口)
* Housing:Black,Nylon+GF
* Male Pin:Copper Alloy,Gold Plated
* Gasket:Black,EPDM
* Clamp Ring:Black,Nylon
* Seals:Black,EPDM
* Sealing Nut:Black,Nylon
* Liquid Glue:Clear

| | | | | | |
|---|---|---|---|---|---|
| UNIT:mm | TITLE Standard Assy Lock 7P M Conn M Pin | LTW 亮泰企業股份有限公司 | ITEM NO LTWBD-07BMMA-LL7001 | DRAWN BY Tina | DATE 2006/04/06 |
| TOLERANCE .X ±0.25 .XX ±0.1 .XXX ±0.05 ANGLES ±1° | SCALE Free / SHEET 1 OF 1 | | DWG NO LTWBD-07BMMA-LL7001 | CHECKED BY Zhuting | DATE 2006/04/12 |
| | REV. A / SIZE A4 / QC :Inspection Item | | CUSTOMER | APPROVED BY Rita | DATE 2006/04/20 |

THIS INFORMATION IS CONFIDENTIAL AND IS DISCLOSED TO YOU ON CONDITION THAT NO FURTHER DISCLOSURE IS MADE BY YOU TO OTHER THAN LTW PERSONNEL WITHOUT AUTHORIZATION FROM LTW CORP.