REV.	ECN NO.	DATE	SIGN	DESCRIPTION

ALTW
DCC. DEPT.
CONFIDENTIAL
2011.07.22
ISSUED

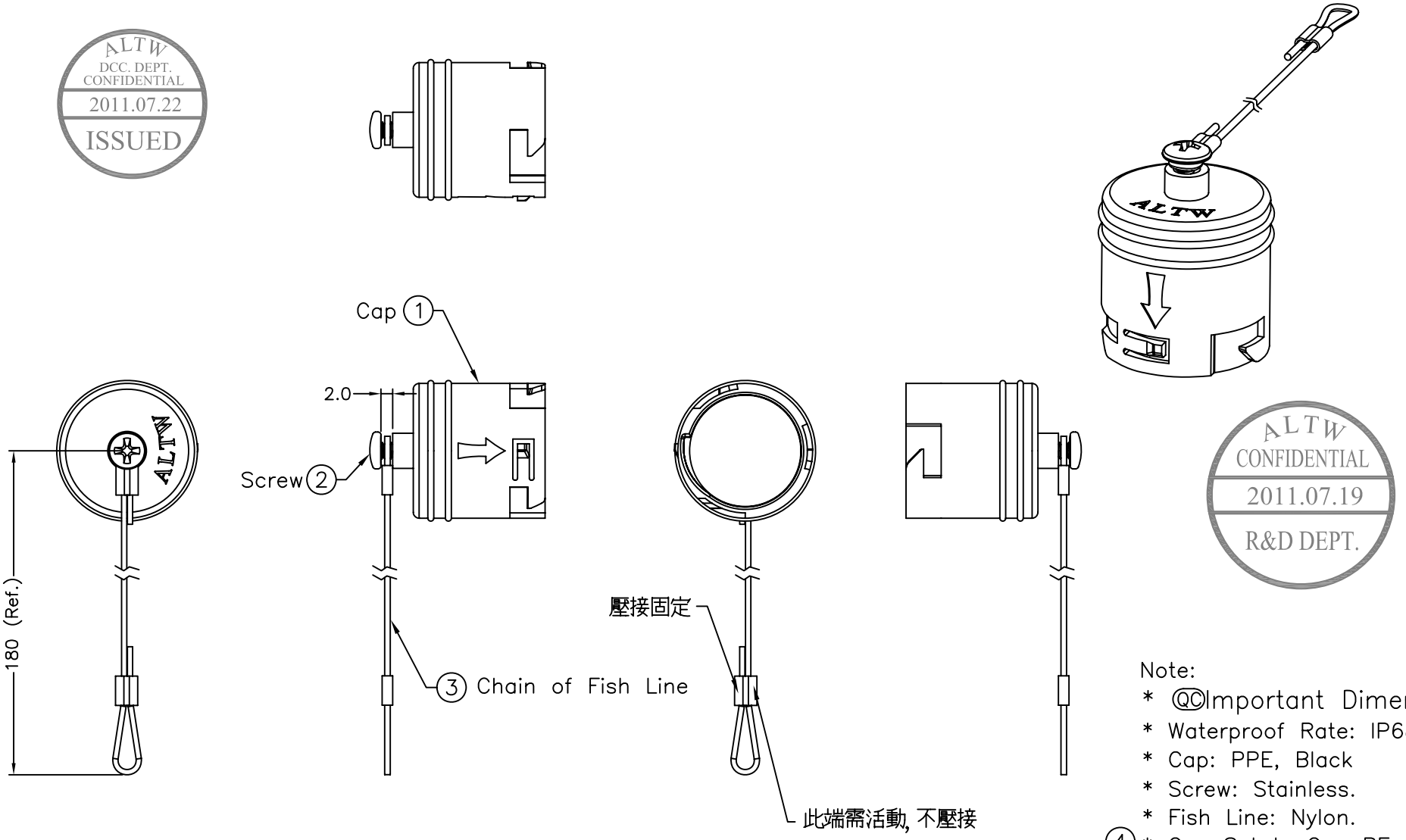

ALTW
CONFIDENTIAL
2011.07.19
R&D DEPT.

Note:
* QC Important Dimensions.
* Waterproof Rate: IP68.
* Cap: PPE, Black
* Screw: Stainless.
* Fish Line: Nylon.
4 * One Set In One PE Bag.
Part of Fish Line: Stainless.

UNIT:mm	TITLE: WATERPROOF CAP FOR PW II F CON	Amphenol LTW 安費諾亮泰企業股份有限公司	ITEM NO: LTWCAP-WPWCFLD1	DRAWN BY: Micky	DATE: 2011/07/19
TOLERANCE .X ±0.25 .XX ±0.1 .XXX ±0.05 ANGLES ±1°	SCALE: Free / SHEET 1 OF 1		DWG NO: LTWCAP-WPWCFLD1	CHECKED BY: Doreen	DATE: 2011/07/19
	REV. A / SIZE A4 / QC :Inspection Item		CUSTOMER	APPROVED BY: Kevin	DATE: 2011/07/19

THIS DOCUMENT IS SUBJECT TO CHANGE WITHOUT NOTICE. IT IS CONFIDENTIAL AND A PROPERTY OF Amphenol LTW. DISCLOSURE TO THIRD PARTY HAS TO BE AUTHORIZED BY Amphenol LTW.