REV.	ECN NO.	DATE	SIGN	DESCRIPTION
A	Initial Release	2010/10/19	Jimmy	Rev.01 Changed To Rev.A

ALTW CONFIDENTIAL 2010.10.19 R&D DEPT.

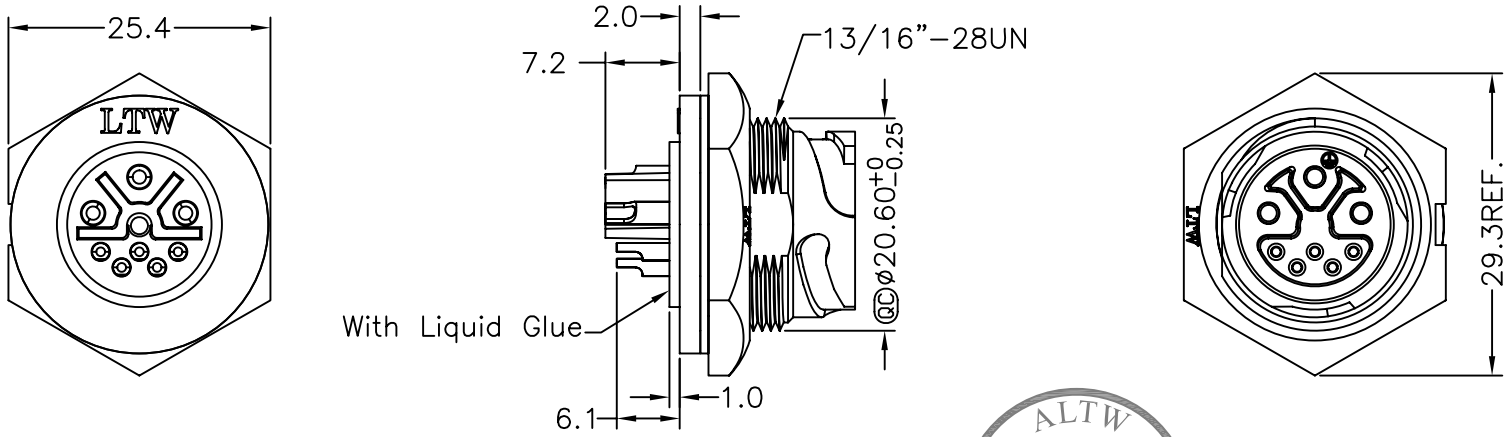

ALTW DCC. DEPT. CONFIDENTIAL 2010.10.19 ISSUED

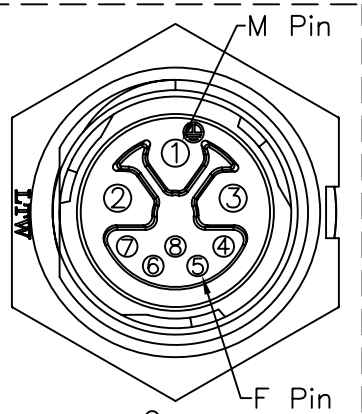

Conn.
Pin Assignments

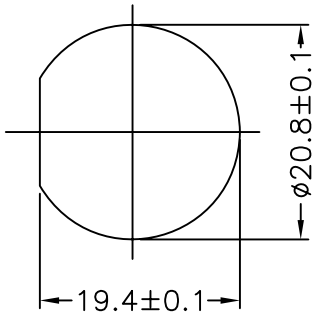

Recommended Panel Cut-Out

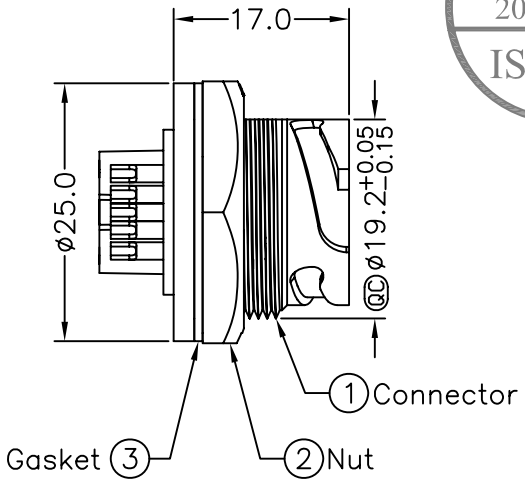

Note:
* QC Important Dimension To Check.
* Waterproof Rate: IP67
* Connector: Nylon+GF, Black
* Pin: Copper Alloy, Gold Plated
* Use With Waterproof Cap Or Dust Cap
  Panel Thickness Max: 3.0mm
* Use Without Waterproof Cap Or Dust Cap
  Panel Thickness Max: 4.0mm

UNIT:mm	TITLE: HyBrid Panel,Middle,3Key 3MPin(10A)+5FPin(2A)	Amphenol LTW 安費諾亮泰企業股份有限公司	ITEM NO: LTWCBU-08PMES-TC7001	DRAWN BY: Jimmy	DATE: 2010/10/19
TOLERANCE: .X ±0.25, .XX ±0.1, .XXX ±0.05, ANGLES ±1°	SCALE: Free / SHEET: 1 OF 1		DWG NO: LTWCBU-08PMES-TC7001	CHECKED BY: Dominic	DATE: 2010/10/19
	REV.: A / SIZE: A4 / QC :Inspection Item		CUSTOMER	APPROVED BY: Win	DATE: 2010/10/19

THIS DOCUMENT IS SUBJECT TO CHANGE WITHOUT NOTICE. IT IS CONFIDENTIAL AND A PROPERTY OF Amphenol LTW. DISCLOSURE TO THIRD PARTY HAS TO BE AUTHORIZED BY Amphenol LTW.

FMWI0702-01-01A2