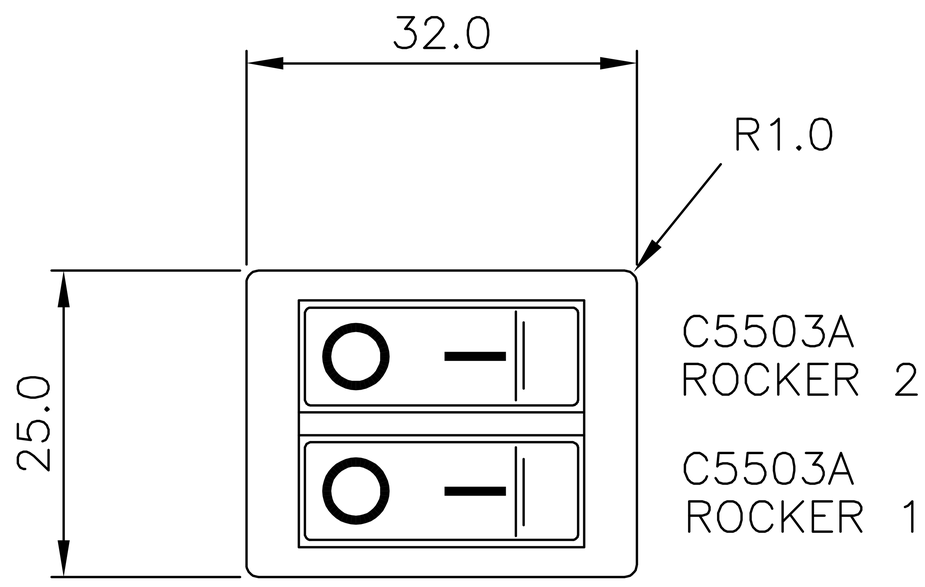


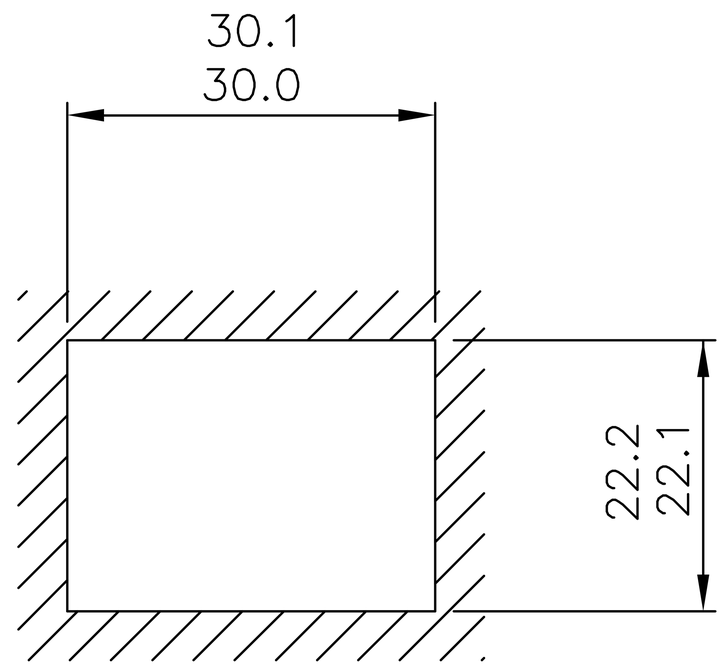


SUITABLE PANEL CUTOUT
FOR 0.75 TO 2.5
PANEL THICKNESS

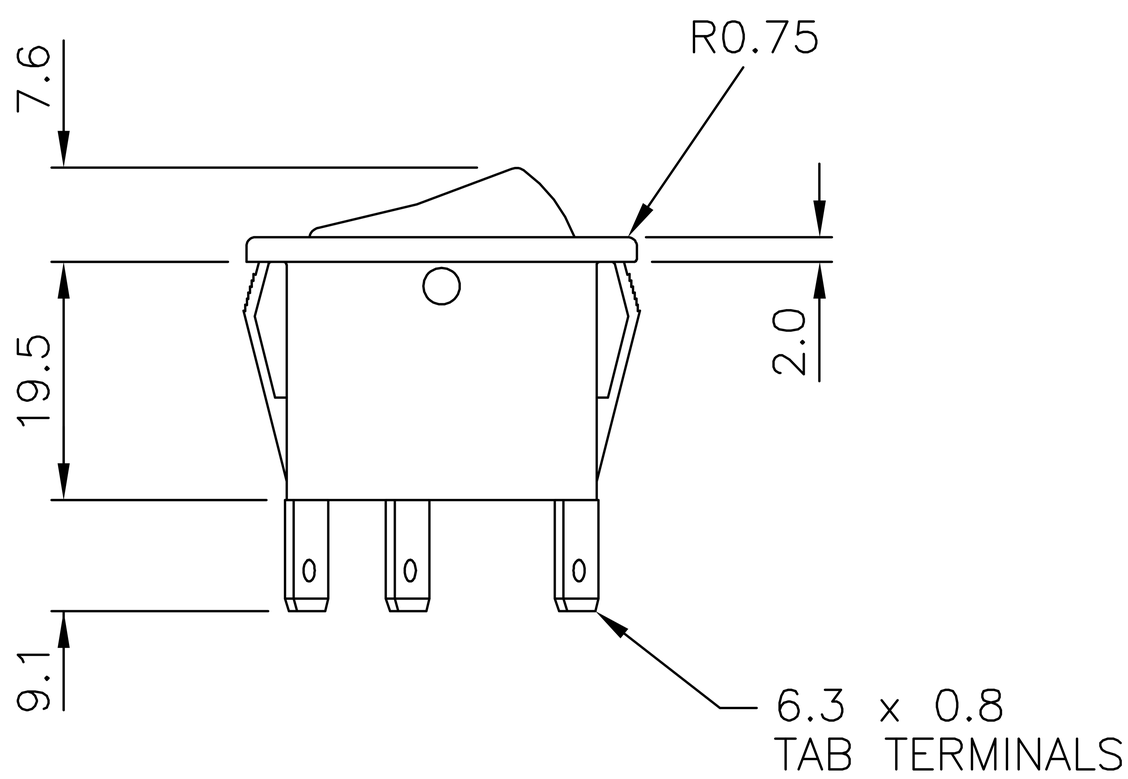


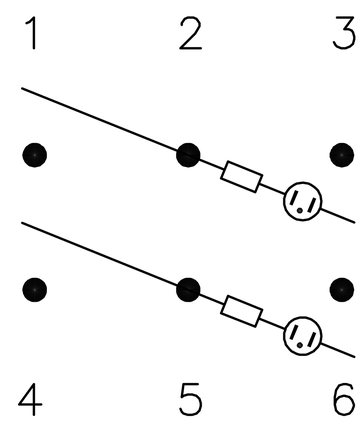


SWITCH FUNCTION

2 x SINGLE POLE
ON/OFF ILLUMINATED
230V

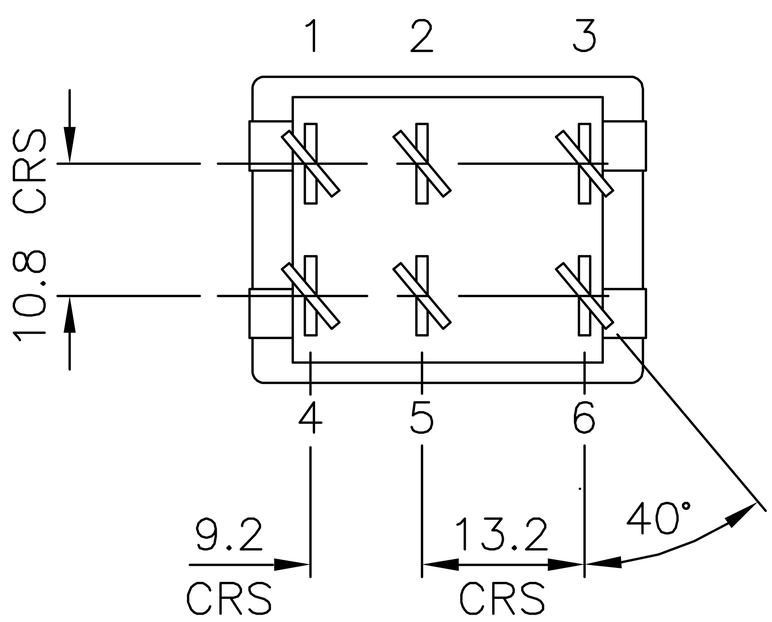


| SWITCH DETAILS | | |
|---|---|---|
| DESCRIPTION | TYPE | COLOUR |
| TERMINAL | C | – |
| ROCKER 1 | A | RED |
| ROCKER LEGEND | EN3036 | WHITE |
| ROCKER 2 | A | RED |
| ROCKER LEGEND | EN3036 | WHITE |
| BODY | L | BLACK |

CP061/FORM-F116 ISS 4

| ISSUE/CHANGE | | |
|---|---|---|
| | | |
| | | |
| | | |
| | | |
| | | |
| 1 | DCR5636 | 16.04.02 |

DIMENSIONS IN MM
LIMITS – LINEAR = ± 0.3
– ANGULAR = ± 1°
UNLESS OTHERWISE STATED
DO NOT SCALE
IF IN DOUBT–ASK

| DRAWN | DATE | CHECKED | SCALE |
|---|---|---|---|
| R.Taylor | 16.04.02 | | 1 : 1 |

DRAWN IN ACCORDANCE
WITH B.S. 308
FOR TECHNICAL INFORMATION
SEE CATALOGUE

Arcolectric
SWITCHES PLC

COPYRIGHT © RESERVED

OUTLINE DRAWING FOR
TWIN
ROCKER SWITCH

DRAWING No
C553TALNAC

A
4