REV.	ECN NO.	DATE	SIGN	DESCRIPTION

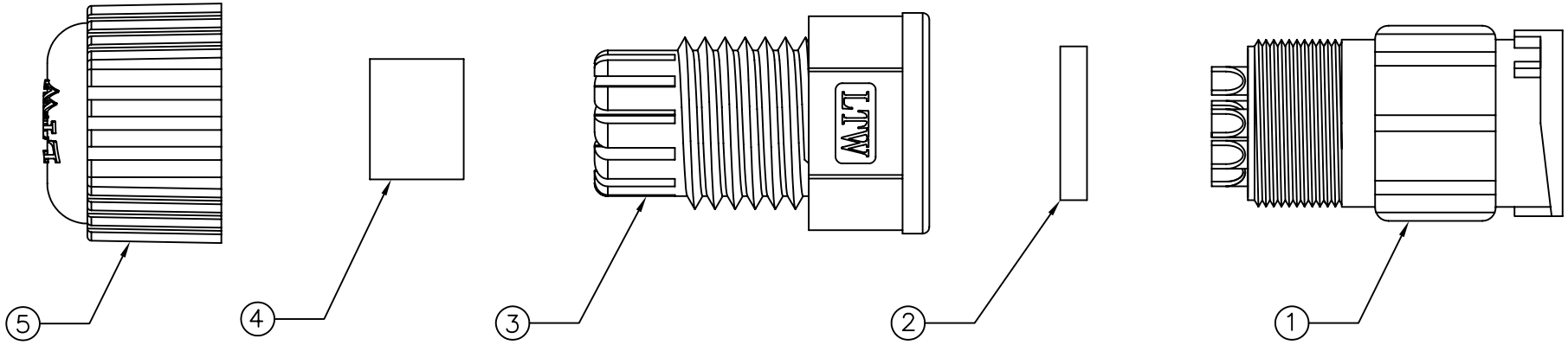

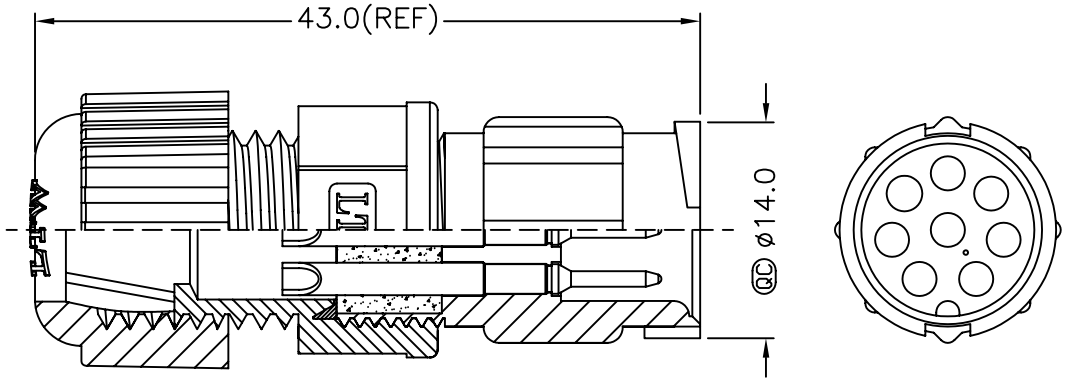

LTW
ENG. DEPT.
CONFIDENTIAL
2006.03.29
ISSUED

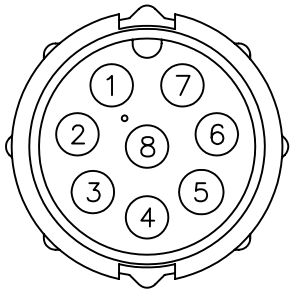

Pin Assignments
Front View

Notes:
* QC Impotant Dimension To Check.
* Waterproof Rate:IP67
* Connector: Black,Nylon+GF
* Pin: Brass,Gold Plated
* Gasket: Black,EPDM
* Clamp Ring: Black,Nylon
* Seals For Cable OD:ø4.5mm~ø6.5mm.
* Sealing Nut: Black,Nylon
* One Set Unassembled in One PE Bag

UNIT:mm	TITLE: Standard 8Pin M Conn. Assembly	LTW 亮泰企業股份有限公司	ITEM NO: LTWBD-08BMMA-LL7001	DRAWN BY: Ronald	DATE: 2006/03/23
TOLERANCE: .X ±0.25, .XX ±0.1, .XXX ±0.05, ANGLES ±1°	SCALE: Free / SHEET 1 OF 1		DWG NO: LTWBD-08BMMA-LL7001	CHECKED BY: Michael Cadiente	DATE: 2006/03/23
	REV. A / SIZE A4 / QC :Inspection Item		CUSTOMER	APPROVED BY: Win	DATE: 2006/03/23

THIS INFORMATION IS CONFIDENTIAL AND IS DISCLOSED TO YOU ON CONDITION THAT NO FURTHER DISCLOSURE IS MADE BY YOU TO OTHER THAN LTW PERSONNEL WITHOUT AUTHORIZATION FROM LTW CORP.