DEGSON ELECTRONICS CO., LTD.

Product Specification

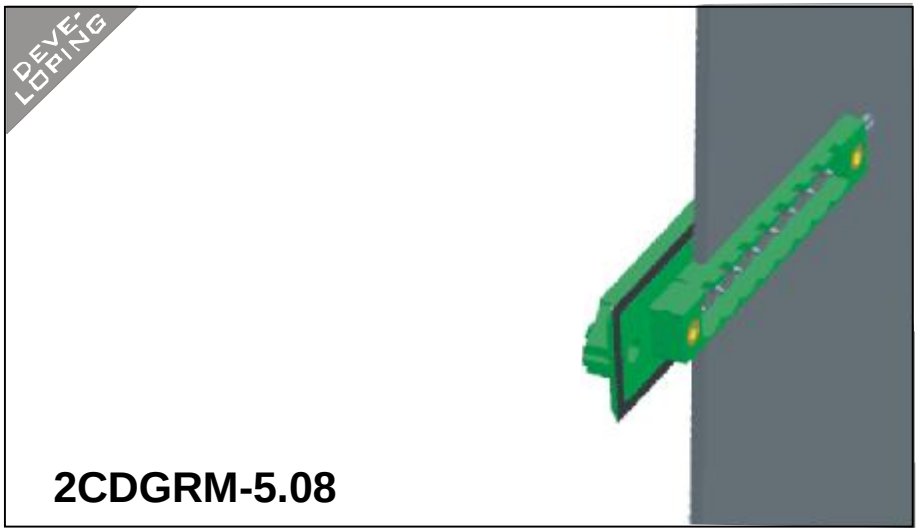

2CDGRM-5.08

Approval		
Electrical		
Standard	UL	IEC
Rated voltage	300V	320V
Rated current	15A	20A
With standing voltage	AC2500V/1Min	
Mechanical		
Ambient temperature	-40℃~+105 ℃	
Dimensions		
Pitch	5.08mm(.200″)	
Poles	2P-22P	
Material		
Housing	PA66,UL94V-0	
Pin header	Brass, Ni plated	
Nut	M2.5,Brass	

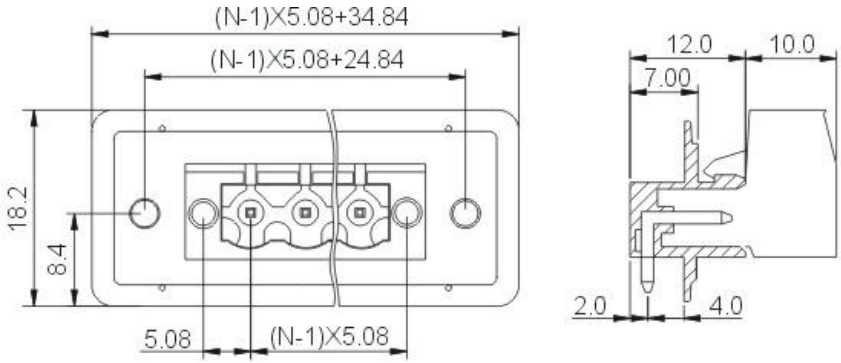

HOW TO ORDER :

[ ] – [ ][ ] P — 1 [ ] — X X X Customer Request

Series No. | No. of pole | Color

1	Gray	4	Green	7	Transp-arent
2	Blue	5	Orange	8	Yellow
3	Black	6	Red	9	white

mm (INCH)	DEGSON	DEGSON ELECTRONICS CO., LTD.
THIROANGLE PROJECTION	NAME	2CDGRM-5.08