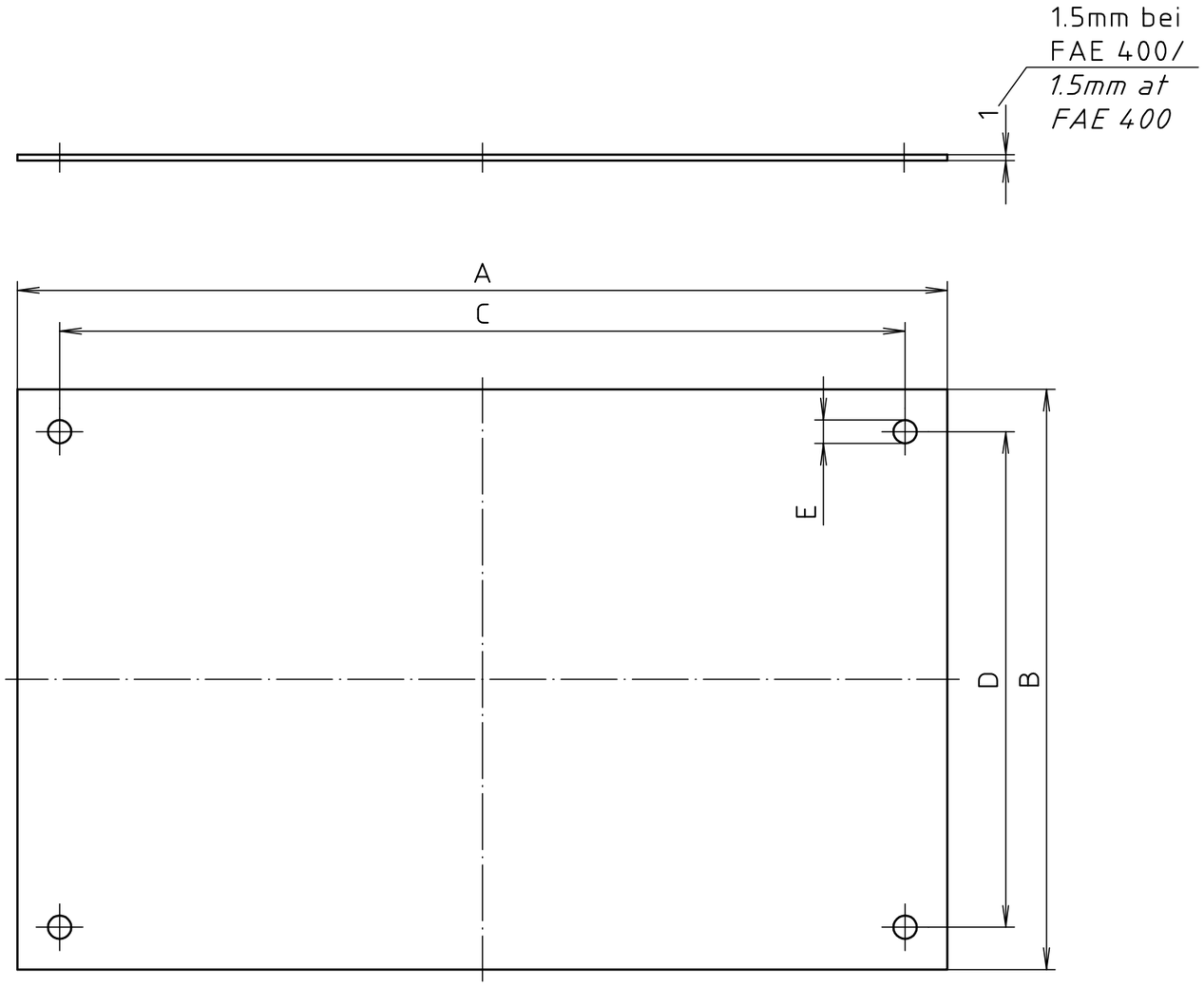


| | A | B | C | D | E |
|---|---|---|---|---|---|
| FAE 130 | 124.5 | 124.5 | 110 | 110 | 4.2 |
| FAE 160/170 | 159.5 | 99.5 | 145 | 85 | 4.2 |
| FAE 200 | 206.5 | 118.5 | 193 | 105 | 4.2 |
| FAE 250 | 250.5 | 150.5 | 236 | 136 | 4.2 |
| FAE 310/350 | 288.4 | 188.8 | 275 | 175 | 4.2 |
| FAE 400 | 354.5 | 224.5 | 336 | 206 | 4.2 |

Maßstab/
*Scale:* –

Zeichnungs-Nr. / *Drawing-No.:*
3K 5075.089.04

Artikel / *Article:*
RCP – FAE
Katalogzeichnung/
*Catalogue drawing*

| Ä.Nr/ *Alt-No.:* | Datum/ *Date:* |
|---|---|
| – | – |
| – | – |
| – | – |
| – | – |
| – | – |
| – | – |
| – | – |
| 2914 | 21.12.93 |
| 2787 | 23.02.93 |
| 2735 | 04.12.92 |

BOPLA
A Phoenix Mecano Company

DISK: 2 600 847
Datum/*Date:* –

"Schutzvermerk nach DIN ISO 16016 beachten" "*Please pay attention to copyright note DIN ISO 16016*"