This document was generated on 12/29/2022

PLEASE CHECK WWW.MOLEX.COM FOR LATEST PART INFORMATION

Part Number: 2004490001

Status: Active

Overview: EdgeLock Wire-to-Edge-Card Signal System

Description: 2.00mm Pitch EdgeLock Crimp Terminal, Phosphor Bronze, Tin (Sn) Plating,Reel

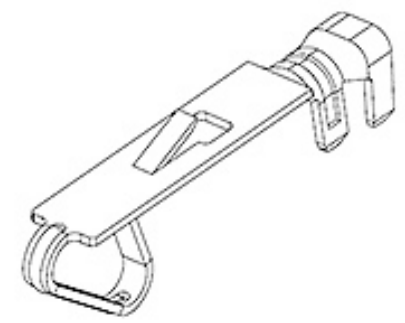

Series image - Reference only

Documents:

Drawing (PDF)
Product Specification 2008900001PS-000 (PDF)
Packaging Specification 2004490001PK-000 (PDF)
RoHS Certificate of Compliance (PDF)

General

Product Family	Crimp Terminals
Series	200449
Application	Signal, Wire-to-Board
Crimp Quality Equipment	Yes
Overview	EdgeLock Wire-to-Edge-Card Signal System
Product Name	EdgeLock
Taxonomy	Crimp Terminals
UPC	889056469395

Physical

Durability (mating cycles max)	30
Gender	N/A
Material - Metal	Phosphor Bronze
Material - Plating Mating	Tin
Material - Plating Termination	Tin
Net Weight	47.042/mg
Packaging Type	Reel
Plating min - Mating	1.000µm
Plating min - Termination	1.000µm
Termination Interface: Style	Crimp or Compression
Wire Insulation Diameter	1.10-1.40mm
Wire Size AWG	22, 24
Wire Size mm²	N/A

Electrical

Current - Maximum per Contact	3.0A
Voltage - Maximum	125V

Material Info

Reference - Drawing Numbers

Crimp Specification	2004490001CS-000
Packaging Specification	2004490001PK-000
Product Specification	2008900001PS-000
Sales Drawing	2004490001-000

EU ELV
Not Relevant

EU RoHS
Compliant

China RoHS

REACH SVHC
Not Contained Per - D(2022)4187-DC (10 June 2022)

Halogen-Free Status
Low-Halogen

For more information, please visit Contact US

China ROHS	Green Image
ELV	Not Relevant
RoHS Phthalates	Not Contained

Search Parts in this Series
200449 Series

Use With
EdgeLock Edge Card Connector 200890

Application Tooling | **FAQ**

Tooling specifications and manuals are found by selecting the products below. Crimp Height Specifications are then contained in the Application Tooling Specification document.

Global

Description	Product #
Hand Crimp Tool for EdgeLock Crimp Terminals, 24 AWG	2002182800
Hand Crimp Tool for EdgeLock Crimp Terminals, 22 AWG	2002182900
Extractor Tool for CTX64 Female Crimp Terminals	638135700
FineAdjust Applicator for EdgeLock Crimp	639039800

	Terminal, 24 AWG, UL1061 wire FineAdjust Applicator639039900 for EdgeLock Crimp Terminal, 24 AWG, UL1007 wire

This document was generated on 12/29/2022

PLEASE CHECK WWW.MOLEX.COM FOR LATEST PART INFORMATION