DO NOT SCALE

D

THIS DRAWING AND DESIGN HEREON CONSTITUTES A PROPRIETARY DESIGN OF PACKARD ELECTRIC DIVISION AND IS NOT TO BE DUPLICATED OR REPRODUCED WITHOUT AUTHORITY OF PACKARD ELECTRIC DIVISION

DATE	SYM	REVISION RECORD	AUTH	DR.	CK.
29OC81	A	RELEASED	81005	SR	JM
06NO81	—	REVISED	78729	SR	JM
19NO81	—	12020787 CONN. REVISED	78952	DL	JM
16MR82	—	12020787 CONN. REVISED	80056	JET	JM
30JN82	—	12020787 CONN. REVISED	81587	JET	JM
19JL83	—	1.5 MAX. WAS 1.0 MAX.	85923	GW	MD
28SE87	—	ADDED NOTE #5	115728	TBD	JM
21OC87	—	REVISED TERMINAL NOTE	116529	BAR	JM
12MY88	A1	ADDED ASSEMBLY NOTE	119914	AP	BAR
02OC90	A2	ADDED INDEX CODE & NOTE #6			
		REVISED NOTE #1 & NAME	137293	JH	JH
22JL91	A3	39.1 REF. DIM. WAS 38.5 REF.	143256	HH	HH

PART NO. 12020926

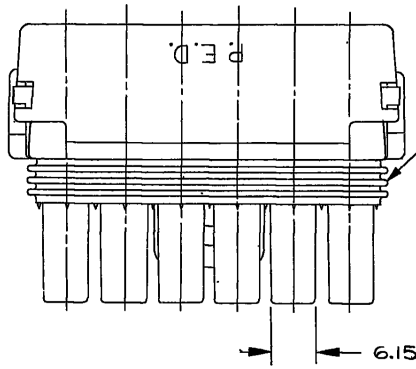

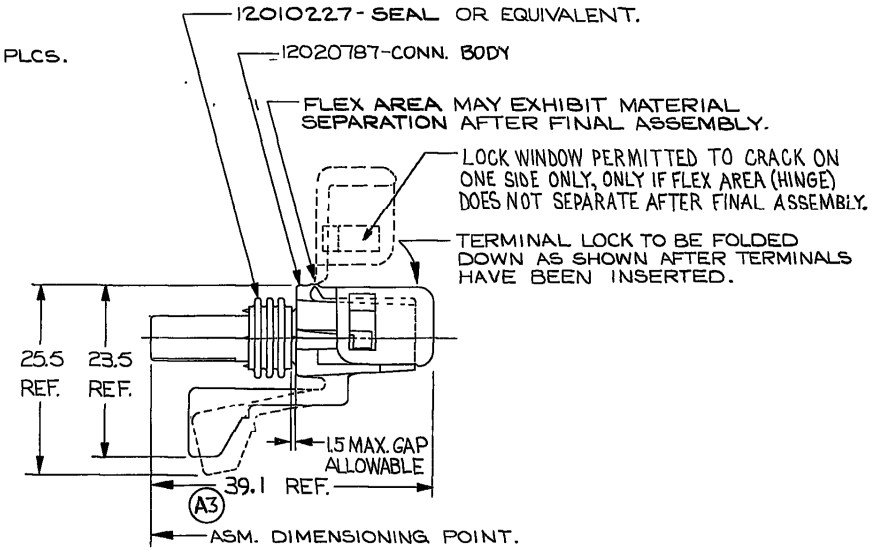

INDEX CODE - 1000001 -
(ALSO SEE HANDBOOK)

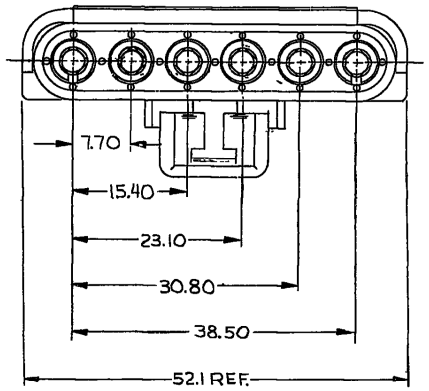

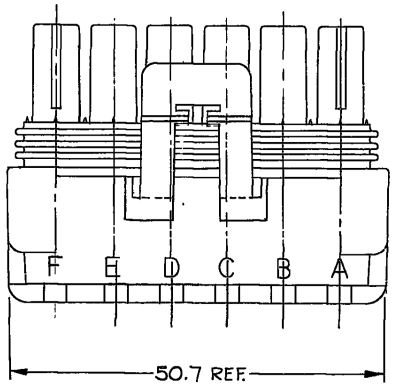

METRIC

DIMENSIONS ARE IN MILLIMETRES UNLESS OTHERWISE SPECIFIED

NOTES —
1. USE FEMALE TERMINAL 12089188 OR EQUIVALENT FOR "IN LINE" APPLICATIONS.
2. USE CABLE SEAL 12015323 OR EQUIVALENT.
3. MATING CONNECTOR 12020786 OR EQUIVALENT.
4. WHEN PARTS ARE SHIPPED, THEY MUST BE PACKED IN PLASTIC BAGS OR SHIPPING CONTAINERS MUST BE LINED WITH PLASTIC LINERS. BAGS OR LINERS MUST BE SEALED TO AVOID ENTRY OF FOREIGN MATTER.
5. SEALING CODE 3.
6. WHEN DESIGNING A PART TO MATE TO THIS WEATHER-PACK CONNECTOR, REQUEST THE LATEST COPY OF DRAWING NUMBER 12020084 FROM PACKARD ELECTRIC DIVISION.

THIRD ANGLE PROJECTION

P. N. C. CODE: C06D1615

CODE NO. 6900

QC—C—5110

TOLERANCE UNLESS OTHERWISE SPECIFIED
DECIMAL: ANGULAR ± 2°
TWO PLACE ± 0.15
ONE PLACE ± 0.3

DWG. DATE 29OC81 | SCALE NONE | DR Scott Pollard 29OC81

EST. NO. | CK T. Mudrey DATE 04NO81

REFERENCE NO 12015799 | APPR Karl R. Grzena DATE 05NO81

APPR [signature] DATE 04NO81

MATERIAL SPEC. SEE DWG.

NAME ASM CONN 6F W/P TWR

PART NO. 1202 0926 | SIZE C

PACKARD ELECTRIC DIVISION
GENERAL MOTORS CORPORATION
WARREN, OHIO

-0-
1150
~~99~~
199-P
199A
37